Push-in fitting, stainless steel NPQR

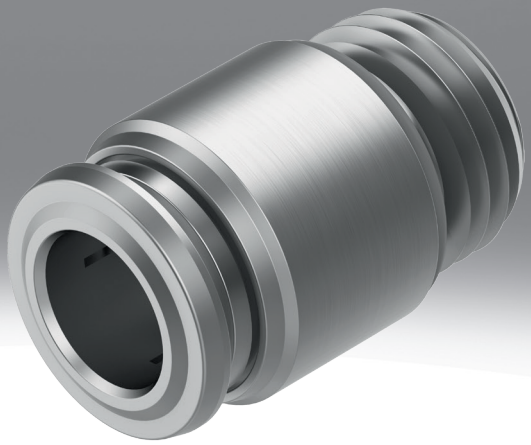

Characteristics

At a glance

Stainless steel fitting for use in areas subject to intensive cleaning.

- High corrosion and chemical resistance
- High temperature resistance
- Operating medium: compressed air, vacuum, water

Design

[B]	Plug screw

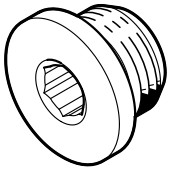

[D]	Straight

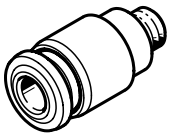

[H]	Bulkhead

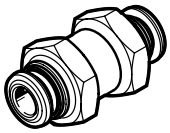

[L]	L-shape

[T]	T-shape

[Y]	Y-shape

Type code

001	Series	
NPQR	Push-in fitting	

002	Design	
B	Plug screw	
D	Straight	
H	Bulkhead	
L	L-shape	
T	T-shape	
Y	Y-shape	

003	Mounting method	
	Standard	
K	Internal hex	

004	Pneumatic connection 1	
G12	G1/2	
G14	G1/4	
G18	G1/8	
G38	G3/8	
M5	M5	
M7	M7	
Q4	Push-in connector 4 mm	
Q6	Push-in connector 6 mm	
Q8	Push-in connector 8 mm	
Q10	Push-in connector 10 mm	
Q12	Push-in connector 12 mm	
Q14	Push-in connector 14 mm	
Q16	Push-in connector 16 mm	

005	Pneumatic connection 2	
	None	
E	Same size as connection 1	
Q4	Push-in connector 4 mm	
Q6	Push-in connector 6 mm	
Q8	Push-in connector 8 mm	
Q10	Push-in connector 10 mm	
Q12	Push-in connector 12 mm	
Q14	Push-in connector 14 mm	
Q16	Push-in connector 16 mm	

006	Packaging quantity [pieces]	
	Standard	

Datasheet

General technical data – Push-in fittings						
Pneumatic connection, port 1	Male thread M5	Male thread M7	Male thread G1/8	Male thread G1/4	Male thread G3/8	Male thread G1/2
Size	Standard					
Design	Push-pull principle					
Mounting position	optional					
Type of seal on screwed plug	Sealing ring					
Nominal torque [1]	1 Nm	3 Nm	3 ... 6 Nm	7.5 Nm	9 Nm	
Tolerance for nominal tightening torque	± 20%					
Size of pack	1					

1) Male thread G1/8: 6 Nm (exception NPQR-DK-G18-Q4: 3 Nm)

General technical data – Plug connectors							
Pneumatic connection, port 1	For tubing outer diameter of 4 mm	For tubing outside diameter of 6 mm	For tubing outer diameter of 8 mm	For tubing outer diameter of 10 mm	For tubing outer diameter of 12 mm	For tubing outer diameter of 14 mm	For tubing outer diameter of 16 mm
Size	Standard						
Design	Push-pull principle						
Mounting position	optional						
Size of pack	1						

General technical data – Push-in bulkhead connector						
Pneumatic connection, port 1	For tubing outer diameter of 4 mm	For tubing outside diameter of 6 mm	For tubing outer diameter of 8 mm	For tubing outer diameter of 10 mm	For tubing outer diameter of 12 mm	For tubing outer diameter of 16 mm
Size	Standard					
Design	Push-pull principle					
Mounting position	optional					
Max. tightening torque	15 Nm		20 Nm			
Min. tightening torque	10 Nm		15 Nm			
Size of pack	1					

Operating and environmental conditions	
Operating medium	Compressed air to ISO 8573-1:2010 [7:-:-], Water (liquid, ice-free)
Note on operating and pilot medium	Lubricated operation possible
Corrosion resistance class CRC [1]	4 - Very high corrosion stress
Suitable for use with food	See declaration of conformity NSF/ANSI 169
Certificate issuing authority	NSF C0556009

1) More information www.festo.com/x/topic/crc

Operating and ambient conditions – For tubing O.D. 4 mm; 6 mm; 8 mm; 10 mm; 12 mm	
Operating pressure complete temperature range	-0.95 ... 16 bar
Note on operating pressure	Water: max. 0.7 MPa at 0 - 80°C
Ambient temperature	-20 ... 150°C

Operating and ambient conditions – For tubing O.D. 14 mm; 16 mm	
Operating pressure complete temperature range	-0.95 ... 12 bar
Note on operating pressure	Water: max. 0.7 MPa at 0 - 80°C
Ambient temperature	-5 ... 150°C

Operating and environmental conditions – NPQR-D-Q16-Q12	
Operating pressure complete temperature range	-0.95 ... 12 bar
Note on operating pressure	Water: max. 0.7 MPa at 0 - 80°C
Ambient temperature	-5 ... 150°C

Datasheet

Materials	
Material housing	High-alloy stainless steel
Material release ring	High-alloy stainless steel
Colour of release ring	Silver
Material tubing clamp component	High-alloy stainless steel
Thrust ring material	PPSU
Guard ring material	High-alloy stainless steel
Material nut	High-alloy stainless steel
Material thread seal	FPM
Material tubing seal	FPM
Note on materials	RoHS-compliant
LABS (PWIS) conformity	VDMA24364-B2-L
Suitability for the production of Li-ion batteries	Suitable for battery production with reduced Cu/Zn/Ni values (F1a)
Cleanroom class	Class 4 according to ISO 14644-1, Element installed statically, no meaningful evaluation possible according to ISO 14644-1

Dimensions

Dimensions – Push-in fitting NPQR-DK-G18/G14/G38/G12

Download CAD data www.festo.com

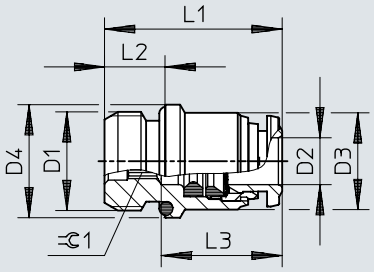

	D1	D2 ø	D3 ø	D4 ø	L1	L2	L3[1]	⌲1
NPQR-DK-G18-Q4	G1/8	4	10	12,9	19,5	6	14	2,5
NPQR-DK-G14-Q6	G1/4	6	12,8	15	23,5	8	16	4
NPQR-DK-G38-Q8	G3/8	8	14	20	22	9	16,8	6
NPQR-DK-G38-Q10	G3/8	10	17	20	26,5	9	19,35	7
NPQR-DK-G12-Q12	G1/2	12	20	24,8	30,5	10	22,35	8
NPQR-DK-G12-Q14	G1/2	14	21,5	24,8	29,5	10	21,5	10

1) Tubing insertion depth

Dimensions

Dimensions – Push-in fitting NPQR-DK-M5/M7/G18/G14 Download CAD data www.festo.com

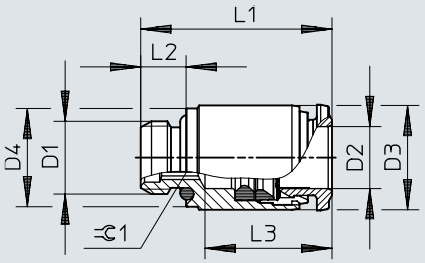

	D1	D2 ø	D3 ø	D4 ø	L1	L2	L3[1]	⬡1
NPQR-DK-M5-Q4	M5	4	9,8	8	19,5	4	14	2
NPQR-DK-M7-Q4	M7	4	9,8	9,4	21	5	14	2,5
NPQR-DK-G18-Q8	G1/8	8	13,8	13	25,5	6	16,8	5
NPQR-DK-G18-Q10	G1/8	10	17	13	28,5	6	19,35	5
NPQR-DK-G14-Q10	G1/4	10	16,8	16	29,5	8	19,35	6

1) Tubing insertion depth

Dimensions

Dimensions – Push-in fitting NPQR-DK-M5/M7/G18/G14/G38/G12 Download CAD data www.festo.com

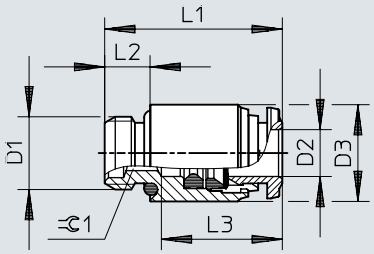

	D1	D2 ø	D3 ø	D4 ø	L1	L2	L3[1]	⬡1
NPQR-DK-M5-Q6	M5	6	10	–	20,1	4	13,5	2,5
NPQR-DK-M7-Q6	M7	6	10	–	21	5	13,5	4
NPQR-DK-G18-Q6	G1/8	6	12,8	–	23,5	6	16	4
NPQR-DK-G14-Q8	G1/4	8	15	–	23,5	8	16,8	6
NPQR-DK-G38-Q12	G3/8	12	20	–	33	9	22,35	8
NPQR-DK-G12-Q16	G1/2	16	24	24,8	36	10	23,5	12

1) Tubing insertion depth

Dimensions

Dimensions – Push-in connector NPQR-D

Download CAD data www.festo.com

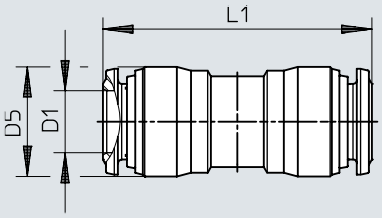

	D1 ø	D5 ø	L1
NPQR-D-Q4-E	4	10,3	30
NPQR-D-Q6-E	6	12,5	34
NPQR-D-Q8-E	8	14,5	35,5
NPQR-D-Q10-E	10	17,5	41
NPQR-D-Q12-E	12	20,5	47
NPQR-D-Q14-E	14	21,5	45
NPQR-D-Q16-E	16	24	53,5

Dimensions

Dimensions – Push-in connector NPQR-D, reducing

Download CAD data www.festo.com

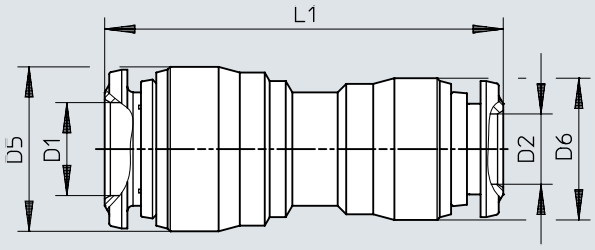

	D1 ø	D2 ø	D5 ø	D6 ø	L1
NPQR-D-Q6-Q4	6	4	12,5	10,3	32,1
NPQR-D-Q8-Q6	8	6	14,5	12,5	35
NPQR-D-Q10-Q8	10	8	17,5	14,5	38,5
NPQR-D-Q12-Q10	12	10	20,5	17,5	44
NPQR-D-Q16-Q12	16	12	24	20,5	52,5

Dimensions

Dimensions – Push-in bulkhead connector NPQR-H

Download CAD data www.festo.com

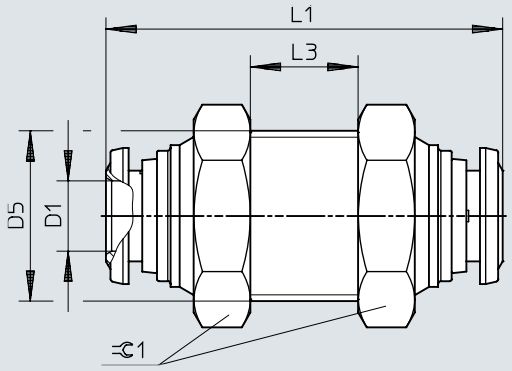

	D1 ø	D5	L1	L3 max.	⬡1
NPQR-H-Q4-E	4	M12x1	31	7	17
NPQR-H-Q6-E	6	M14x1	35	9,5	17
NPQR-H-Q8-E	8	M16x1	36,6	10,5	19
NPQR-H-Q10-E	10	M20x1	42,1	13,3	24
NPQR-H-Q12-E	12	M22x1	48	12,5	26
NPQR-H-Q16-E	16	M27x1,5	53,5	10,4	32

Dimensions

Dimensions – Plug screw NPQR-BK

Download CAD data www.festo.com

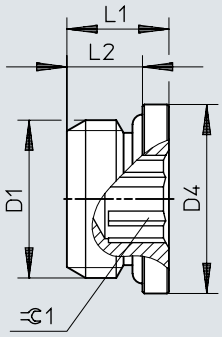

	D1	D4 ⌀	L1	L2	⬡1
NPQR-BK-M5	M5	8	6	4	2
NPQR-BK-M7	M7	9,5	7,5	5	3
NPQR-BK-G18	G1/8	14	8,5	6	5
NPQR-BK-G14	G1/4	18	11	8	6
NPQR-BK-G38	G3/8	20	12,5	9	8
NPQR-BK-G12	G1/2	25	13,5	10	10

Dimensions

Dimensions – Push-in L-fitting NPQR-L

Download CAD data www.festo.com

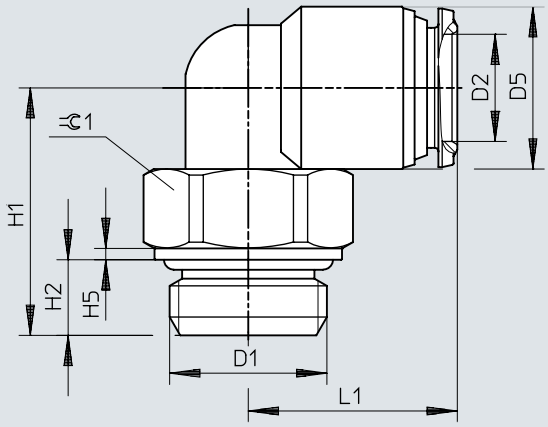

	D1	D2 ø	D5 ø	H1	H2	H5	L1	⬡1
NPQR-L-M5-Q4	M5	4	10	16	4	3	15,5	8
NPQR-L-M5-Q6		6	12,5	17,5	4	3	18	8
NPQR-L-G18-Q4	G1/8	4	10	16	6	1	15,5	13
NPQR-L-G18-Q6		6	12,5	17,5	6	1	18	13
NPQR-L-G18-Q8		8	14,5	23	6	1	20	13
NPQR-L-G14-Q6	G1/4	6	12,5	20	8	1	18	15
NPQR-L-G14-Q8		8	14,5	21	8	1	20	15
NPQR-L-G14-Q10		10	17	27,5	8	0,9	23,5	15
NPQR-L-G38-Q10	G3/8	10	17	25	9	1,5	23,5	20
NPQR-L-G38-Q12		12	20,5	30,5	9	1,5	27,5	20
NPQR-L-G12-Q12	G1/2	12	20,5	28,5	10	1,5	27,5	25
NPQR-L-G12-Q14		14	21,5	33	10	1,5	27,5	25
NPQR-L-G12-Q16		16	24	36,5	10	1,5	33	25

Dimensions

Dimensions – Push-in L-connector NPQR-L

Download CAD data www.festo.com

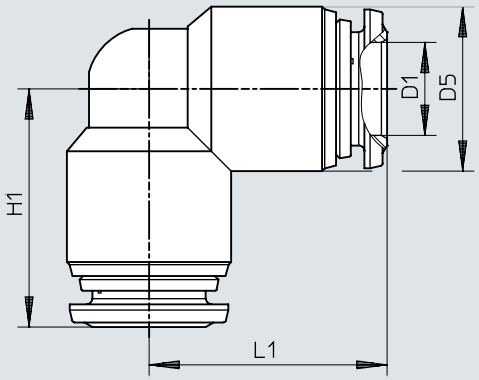

	D1 ø	D5 ø	H1	L1
NPQR-L-Q4-E	4	10	16	16
NPQR-L-Q6-E	6	12,5	19,5	19,5
NPQR-L-Q8-E	8	14,5	21	21
NPQR-L-Q10-E	10	17	24,5	24,5
NPQR-L-Q12-E	12	20,5	29	29
NPQR-L-Q14-E	14	21,5	28,5	28,5
NPQR-L-Q16-E	16	24	33	33

Dimensions

Dimensions – Push-in T-fitting NPQR-T

Download CAD data www.festo.com

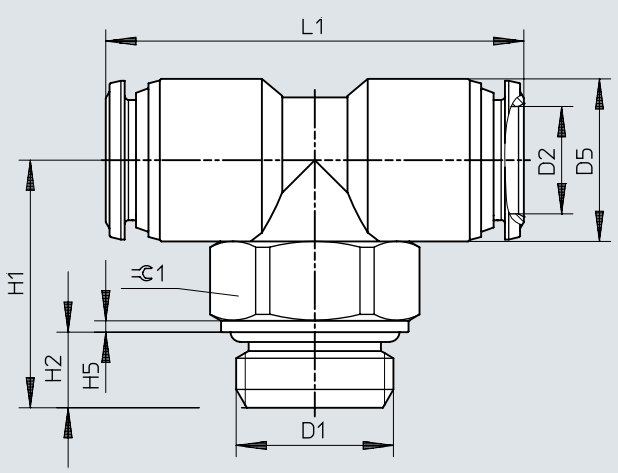

	D1	D2 ø	D5 ø	H1	H2	H5	L1	⬡1
NPQR-T-M5-Q4	M5	4	10	16	4	3	30,5	8
NPQR-T-M5-Q6		6	12,5	17,5	4	3	36	8
NPQR-T-G18-Q6	G1/8	6	12,5	17,5	6	1	36	13
NPQR-T-G18-Q8		8	14,5	23	6	1	40	13
NPQR-T-G14-Q8	G1/4	8	14,5	21	8	1	40	15
NPQR-T-G14-Q10		10	17	27,5	8	1	47	15
NPQR-T-G38-Q10	G3/8	10	17	25	9	1,5	47	20
NPQR-T-G38-Q12		12	20,5	30,5	9	1,5	55	20
NPQR-T-G12-Q12	G1/2	12	20,5	28,5	10	1,5	55	25
NPQR-T-G12-Q16		16	24	36,5	10	1,5	65,5	25

Dimensions

Dimensions – Push-in T-connector NPQR-T

Download CAD data www.festo.com

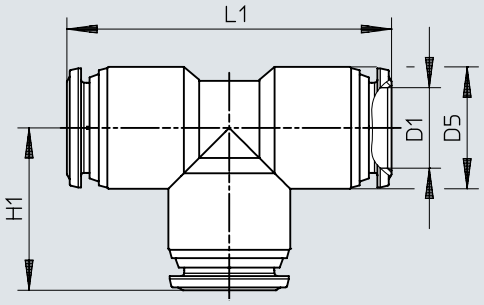

	D1 ø	D5 ø	H1	L1
NPQR-T-Q4-E	4	10	16	32
NPQR-T-Q6-E	6	12,5	19,5	39,5
NPQR-T-Q8-E	8	14,5	21	42
NPQR-T-Q10-E	10	17	24,5	49
NPQR-T-Q12-E	12	20,5	29	58
NPQR-T-Q14-E	14	21,5	28,5	57,5
NPQR-T-Q16-E	16	24	32,8	65,5

Dimensions

Dimensions – Push-in Y-connector NPQR-Y

Download CAD data www.festo.com

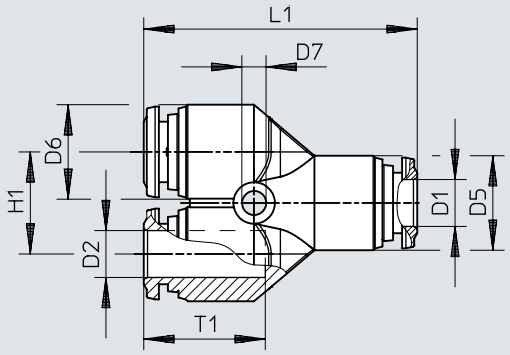

	D1 ø	D2 ø	D5 ø	D6 ø	D7 ø	H1	L1	T1[1]
NPQR-Y-Q4-E	4	4	10	10	3,2	11	31	14
NPQR-Y-Q6-E	6	6	12,5	12,5	3,2	13,5	36	16
NPQR-Y-Q8-E	8	8	14,5	14,5	3,2	15,5	40	17
NPQR-Y-Q10-E	10	10	17	17	4,2	18,5	47,5	19,5
NPQR-Y-Q12-E	12	12	20,5	20,5	4,2	21,5	56,2	22,5
NPQR-Y-Q16-E	16	16	24	24	5,2	25	62	23,5

1) Tubing insertion depth

Ordering data

Push-in fitting NPQR-DK

	Pneumatic connection, port 1	Pneumatic connection, port 2	Nominal size	Type of mounting	Part no.	Type
	Male thread M5	For tubing outside diameter of 4 mm	2.1 mm	Internal hexagon, size 2 mm	**8085657**	**NPQR-DK-M5-Q4**
		For tubing outside diameter of 6 mm	2.6 mm	Internal hexagon, size 2.5 mm	**8085659**	**NPQR-DK-M5-Q6**
	Male thread M7	For tubing outside diameter of 4 mm			**8085658**	**NPQR-DK-M7-Q4**
		For tubing outside diameter of 6 mm	4.2 mm	Internal hexagon, size 4 mm	**8085660**	**NPQR-DK-M7-Q6**
	Male thread G1/8	For tubing outside diameter of 4 mm	2.6 mm	Internal hexagon, size 2.5 mm	**8085661**	**NPQR-DK-G18-Q4**
		For tubing outside diameter of 6 mm	4.2 mm	Internal hexagon, size 4 mm	**8085662**	**NPQR-DK-G18-Q6**
		For tubing outside diameter of 8 mm	5.3 mm	Internal hexagon, size 5 mm	**8085663**	**NPQR-DK-G18-Q8**
		For tubing outside diameter of 10 mm			**8087695**	**NPQR-DK-G18-Q10**
	Male thread G1/4	For tubing outside diameter of 6 mm	4.2 mm	Internal hexagon, size 4 mm	**8085664**	**NPQR-DK-G14-Q6**
		For tubing outside diameter of 8 mm	6.3 mm	Internal hexagon, size 6 mm	**8085665**	**NPQR-DK-G14-Q8**
		For tubing outside diameter of 10 mm			**8085666**	**NPQR-DK-G14-Q10**
	Male thread G3/8	For tubing outside diameter of 8 mm			**8086953**	**NPQR-DK-G38-Q8**
		For tubing outside diameter of 10 mm	7.3 mm	Internal hexagon, A/F 7 mm	**8085667**	**NPQR-DK-G38-Q10**
		For tubing outer diameter of 12 mm	8.4 mm	Internal hexagon, size 8 mm	**8085668**	**NPQR-DK-G38-Q12**
	Male thread G1/2				**8085669**	**NPQR-DK-G12-Q12**
		For tubing outside diameter of 14 mm	11.6 mm	Internal hexagon, size 10 mm	**8085670**	**NPQR-DK-G12-Q14**
		For tubing outside diameter of 16 mm	12.6 mm	Internal hexagon, size 12 mm	**8085671**	**NPQR-DK-G12-Q16**

Push-in connector NPQR-D

	Pneumatic connection, port 1	Pneumatic connection, port 2	Nominal size	Product weight	Part no.	Type
	For tubing outer diameter of 4 mm	For tubing outside diameter of 4 mm	3 mm	9.8 g	**8085697**	**NPQR-D-Q4-E**

Ordering data

Push-in connector NPQR-D

	Pneumatic connection, port 1	Pneumatic connection, port 2	Nominal size	Product weight	Part no.	Type
	For tubing outside diameter of 6 mm	For tubing outside diameter of 6 mm	5 mm	15 g	**8085698**	**NPQR-D-Q6-E**
	For tubing outer diameter of 8 mm	For tubing outside diameter of 8 mm	7 mm	19.4 g	**8085699**	**NPQR-D-Q8-E**
	For tubing outer diameter of 10 mm	For tubing outside diameter of 10 mm	9 mm	32.4 g	**8085700**	**NPQR-D-Q10-E**
	For tubing outer diameter of 12 mm	For tubing outer diameter of 12 mm	11 mm	49.1 g	**8085701**	**NPQR-D-Q12-E**
	For tubing outer diameter of 14 mm	For tubing outside diameter of 14 mm	13 mm	47.8 g	**8085702**	**NPQR-D-Q14-E**
	For tubing outer diameter of 16 mm	For tubing outside diameter of 16 mm	15 mm	65.6 g	**8085703**	**NPQR-D-Q16-E**

Push-in connector NPQR-D (reducing)

	Pneumatic connection, port 1	Pneumatic connection, port 2	Nominal size	Product weight	Part no.	Type
	For tubing outside diameter of 6 mm	For tubing outside diameter of 4 mm	3 mm	12 g	**8085704**	**NPQR-D-Q6-Q4**
	For tubing outer diameter of 8 mm	For tubing outside diameter of 6 mm	5 mm	16.7 g	**8085705**	**NPQR-D-Q8-Q6**
	For tubing outer diameter of 10 mm	For tubing outside diameter of 8 mm	7 mm	25.1 g	**8085706**	**NPQR-D-Q10-Q8**
	For tubing outer diameter of 12 mm	For tubing outside diameter of 10 mm	9 mm	39.6 g	**8085707**	**NPQR-D-Q12-Q10**
	For tubing outer diameter of 16 mm	For tubing outer diameter of 12 mm	11 mm	63.7 g	**8085708**	**NPQR-D-Q16-Q12**

Push-in bulkhead connector NPQR-H

	Pneumatic connection, port 1	Pneumatic connection, port 2	Nominal size	Product weight	Part no.	Type
	For tubing outer diameter of 4 mm	For tubing outside diameter of 4 mm	3 mm	24.3 g	**8085729**	**NPQR-H-Q4-E**
	For tubing outside diameter of 6 mm	For tubing outside diameter of 6 mm	5 mm	28.3 g	**8085730**	**NPQR-H-Q6-E**
	For tubing outer diameter of 8 mm	For tubing outside diameter of 8 mm	7 mm	37.1 g	**8085731**	**NPQR-H-Q8-E**
	For tubing outer diameter of 10 mm	For tubing outside diameter of 10 mm	9 mm	66.8 g	**8085732**	**NPQR-H-Q10-E**
	For tubing outer diameter of 12 mm	For tubing outer diameter of 12 mm	11 mm	88.1 g	**8085733**	**NPQR-H-Q12-E**
	For tubing outer diameter of 16 mm	For tubing outside diameter of 16 mm	15 mm	153.6 g	**8099104**	**NPQR-H-Q16-E**

Ordering data

Plug screw NPQR-BK

	Pneumatic connection, port 1	Type of mounting	Product weight	Part no.	Type
	Male thread M5		3.2 g	**8104803**	**NPQR-BK-M5**
	Male thread M7	Internal hexagon, size 3 mm	2.1 g	**8085672**	**NPQR-BK-M7**
	Male thread G1/8	Internal hexagon, size 5 mm	4 g	**8085673**	**NPQR-BK-G18**
	Male thread G1/4	Internal hexagon, size 6 mm	11 g	**8085674**	**NPQR-BK-G14**
	Male thread G3/8	Internal hexagon, size 8 mm	17 g	**8085675**	**NPQR-BK-G38**
	Male thread G1/2	Internal hexagon, size 10 mm	29 g	**8085676**	**NPQR-BK-G12**

Push-in L-fitting NPQR-L

	Pneumatic connection, port 1	Pneumatic connection, port 2	Nominal size	Type of mounting	Part no.	Type
	Male thread M5	For tubing outside diameter of 4 mm	2 mm	External hexagon, A/F 8 mm	**8085679**	**NPQR-L-M5-Q4**
		For tubing outside diameter of 6 mm			**8098626**	**NPQR-L-M5-Q6**
	Male thread G1/8	For tubing outside diameter of 4 mm		External hexagon, A/F 13 mm	**8085680**	**NPQR-L-G18-Q4**
		For tubing outside diameter of 6 mm	4 mm		**8085681**	**NPQR-L-G18-Q6**
		For tubing outside diameter of 8 mm	6 mm		**8085682**	**NPQR-L-G18-Q8**
	Male thread G1/4	For tubing outside diameter of 6 mm	4 mm	External hexagon, A/F 15 mm	**8085683**	**NPQR-L-G14-Q6**
		For tubing outside diameter of 8 mm	6 mm		**8085684**	**NPQR-L-G14-Q8**
		For tubing outside diameter of 10 mm	8 mm		**8085685**	**NPQR-L-G14-Q10**
	Male thread G3/8			External hexagon, A/F 20 mm	**8085686**	**NPQR-L-G38-Q10**
		For tubing outer diameter of 12 mm	10 mm		**8085687**	**NPQR-L-G38-Q12**
	Male thread G1/2			External hexagon, A/F 25 mm	**8085688**	**NPQR-L-G12-Q12**
		For tubing outside diameter of 14 mm	12 mm		**8085689**	**NPQR-L-G12-Q14**
		For tubing outside diameter of 16 mm	14 mm		**8085690**	**NPQR-L-G12-Q16**

Push-in L-connector NPQR-L

	Pneumatic connection, port 1	Pneumatic connection, port 2	Nominal size	Product weight	Part no.	Type
	For tubing outer diameter of 4 mm	For tubing outside diameter of 4 mm	3 mm	7.8 g	**8085709**	**NPQR-L-Q4-E**

Ordering data

Push-in L-connector NPQR-L

	Pneumatic connection, port 1	Pneumatic connection, port 2	Nominal size	Product weight	Part no.	Type
	For tubing outside diameter of 6 mm	For tubing outside diameter of 6 mm	5 mm	14.9 g	**8085710**	**NPQR-L-Q6-E**
	For tubing outer diameter of 8 mm	For tubing outside diameter of 8 mm	7 mm	20.4 g	**8085711**	**NPQR-L-Q8-E**
	For tubing outer diameter of 10 mm	For tubing outside diameter of 10 mm	9 mm	29.9 g	**8085712**	**NPQR-L-Q10-E**
	For tubing outer diameter of 12 mm	For tubing outer diameter of 12 mm	11 mm	51.8 g	**8085713**	**NPQR-L-Q12-E**
	For tubing outer diameter of 14 mm	For tubing outside diameter of 14 mm	14 mm	60.6 g	**8085714**	**NPQR-L-Q14-E**
	For tubing outer diameter of 16 mm	For tubing outside diameter of 16 mm	16 mm	83.8 g	**8085715**	**NPQR-L-Q16-E**

Push-in T-fitting NPQR-T

	Pneumatic connection, port 1	Pneumatic connection, port 2	Nominal size	Type of mounting	Part no.	Type
	Male thread M5	For tubing outside diameter of 4 mm	2 mm	External hexagon, A/F 8 mm	**8085691**	**NPQR-T-M5-Q4**
		For tubing outside diameter of 6 mm	2.2 mm		**8099103**	**NPQR-T-M5-Q6**
	Male thread G1/8		4 mm	External hexagon, A/F 13 mm	**8085692**	**NPQR-T-G18-Q6**
		For tubing outside diameter of 8 mm	6 mm		**8085693**	**NPQR-T-G18-Q8**
	Male thread G1/4			External hexagon, A/F 15 mm	**8085694**	**NPQR-T-G14-Q8**
		For tubing outside diameter of 10 mm	8 mm		**8099100**	**NPQR-T-G14-Q10**
	Male thread G3/8			External hexagon, A/F 20 mm	**8085695**	**NPQR-T-G38-Q10**
		For tubing outer diameter of 12 mm	10 mm		**8099101**	**NPQR-T-G38-Q12**
	Male thread G1/2			External hexagon, A/F 25 mm	**8099102**	**NPQR-T-G12-Q12**
		For tubing outside diameter of 16 mm	14 mm		**8085696**	**NPQR-T-G12-Q16**

Push-in T-connector NPQR-T

	Pneumatic connection, port 1	Pneumatic connection, port 2	Nominal size	Product weight	Part no.	Type
	For tubing outer diameter of 4 mm	For tubing outside diameter of 4 mm	3 mm	10 g	**8085716**	**NPQR-T-Q4-E**
	For tubing outside diameter of 6 mm	For tubing outside diameter of 6 mm	5 mm	19.2 g	**8085717**	**NPQR-T-Q6-E**
	For tubing outer diameter of 8 mm	For tubing outside diameter of 8 mm	7 mm	26.1 g	**8085718**	**NPQR-T-Q8-E**
	For tubing outer diameter of 10 mm	For tubing outside diameter of 10 mm	9 mm	37.7 g	**8085719**	**NPQR-T-Q10-E**

Ordering data

Push-in T-connector NPQR-T

	Pneumatic connection, port 1	Pneumatic connection, port 2	Nominal size	Product weight	Part no.	Type
	For tubing outer diameter of 12 mm	For tubing outer diameter of 12 mm	11 mm	66.7 g	**8085720**	**NPQR-T-Q12-E**
	For tubing outer diameter of 14 mm	For tubing outside diameter of 14 mm	14 mm	85 g	**8085721**	**NPQR-T-Q14-E**
	For tubing outer diameter of 16 mm	For tubing outside diameter of 16 mm	16 mm	114.7 g	**8085722**	**NPQR-T-Q16-E**

Push-in Y-connector NPQR-Y

	Pneumatic connection, port 1	Pneumatic connection, port 2	Product weight	Part no.	Type
	For tubing outer diameter of 4 mm	For tubing outside diameter of 4 mm	18.2 g	**8085723**	**NPQR-Y-Q4-E**
	For tubing outside diameter of 6 mm	For tubing outside diameter of 6 mm	30.6 g	**8085724**	**NPQR-Y-Q6-E**
	For tubing outer diameter of 8 mm	For tubing outside diameter of 8 mm	37.8 g	**8085725**	**NPQR-Y-Q8-E**
	For tubing outer diameter of 10 mm	For tubing outside diameter of 10 mm	65.2 g	**8085726**	**NPQR-Y-Q10-E**
	For tubing outer diameter of 12 mm	For tubing outer diameter of 12 mm	106.4 g	**8085727**	**NPQR-Y-Q12-E**
	For tubing outer diameter of 16 mm	For tubing outside diameter of 16 mm	140.9 g	**8085728**	**NPQR-Y-Q16-E**